CIE 110 Course Projects

Contents

Contents 1
Project 1: Diode-based logic gate circuits 2
1.1) Suggested Circuit Diagram: 2
1.2) Description: 2
1.3) Components: 3
Project 2: Multi-output power supply 4
2.1) Suggested Circuit Diagram: 4
2.2) Description: 4
2.3) Components: 5
Project 3: Voltage regulator with Zener 6
3.1) Suggested Circuit Diagram: 6
3.2) Description: 6
3.3) Components: 7
Project 4: Traffic light system with seven segments 8
4.1) Suggested Circuit Diagram: 8
4.2) Working Principle: 8
4.3) Bonus Challenge: 8
4.4) Components: 9
Project 5: Common Emitter Audio Amplifier 10
5.1) Suggested Circuit Diagram: 10
5.2) Description: 10
5.3) Components: 11

Project 1: Diode-based logic gate circuits

1.1) Suggested Circuit Diagram:

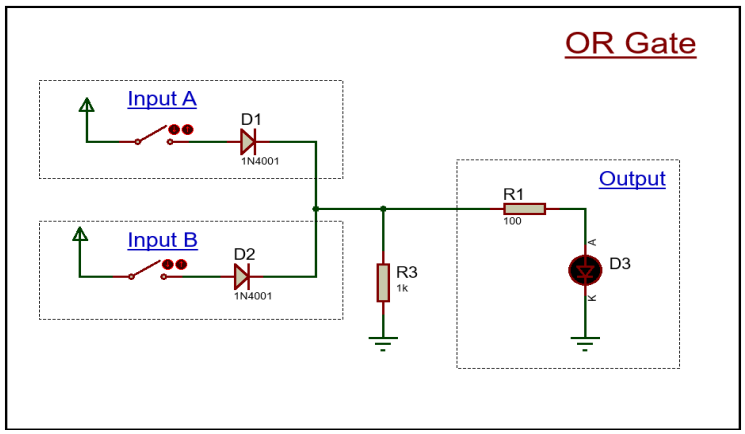

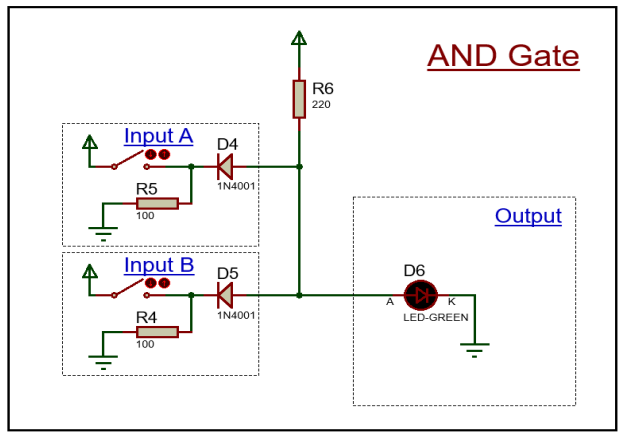

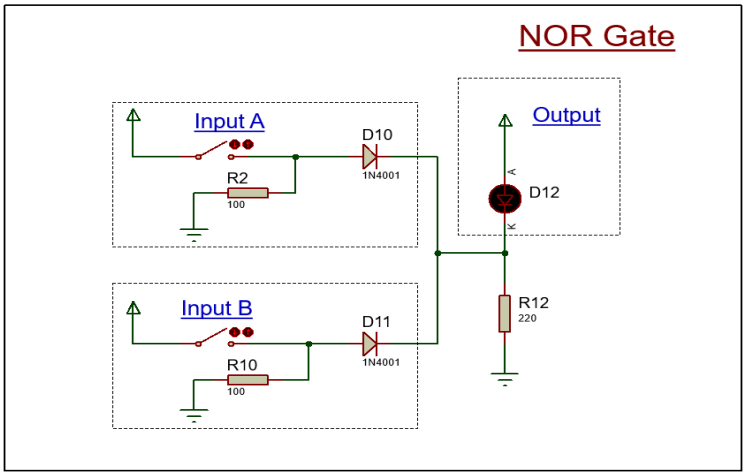

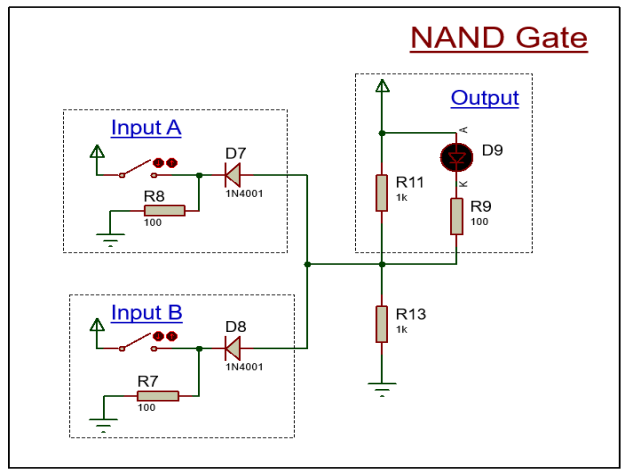

1.2) Description:

- Implementing basic logic functions (OR, AND, NOR, and NAND) using diodes and passive components:
  - OR Gate: The output is HIGH if at least one input is HIGH.
  - AND Gate: The output is HIGH only when both inputs are HIGH.
  - NOR Gate: The output is HIGH only when both inputs are LOW.
  - NAND Gate: The output is HIGH unless both inputs are HIGH.

Note that:

You can also search for similar circuits, ensuring they come from a reliable source.

1.3) Components:

	Component name		Quantity	Link
Logic Gates	Breadboard (Test Board)		1	Breadboard Soldless 830 Tie-points BB-01 Breadboard 830 Tie Point | RAM Electronics website
	Silicon Diodes (1N4001 or 1N4007)		8	Lampatronics: Diode 1N4007 (1A / 1000V) RAM Electronics: 1N4007 Silicon Diode 1A - 1000V
	Light Emitting Diodes (LED) 5 mm (Through Hole)		4 Pieces of mixed Colores	LED 5MM (Red) - Lampatronics LED 5mm Green Color | RAM Electronics website
	Resistors	Resistors (100 Ω)	8	Resistor 100 ohm - 1/4W (2pcs) - Lampatronics
		Resistors (220 Ω)	3	Resistor 220 ohm - 1/4W (2pcs) - Lampatronics
		Resistors (1 KΩ)	2	Resistor 1K ohm - 1/4W (2pcs) - Lampatronics
	Push Button 2 pins		8	lampatronics: push-button-2pins-6x6x5mm
	20 cm Male to Male Jumper Wires Set		10 or more	Jumper Wire 20cm Male to FeMale (1 wire) - Lampatronics PH61 - 20cm Male to Male 40 Jumper Wires Set | RAM Electronics website
Other needed Components	Adapter (Get only one)	Adjustable adapter [Recommended]	1	Wall Adapter Variable from 1.5Vdc to 12Vdc (1A) - Lampatronics
		Fixed adapter + step up module	1	DC Power Adapter (5VDC - 1A) - Lampatronics + MT3608 Boost Step up Converter DC-DC 2A – Free Electronics Or MT3608 USB DC-DC Booster 3V~28Vdc Adjustable Step-Up Converter Module 2A Type-c – Free Electronics Or DC-DC Step UP Boost Converter Module XL6009 (3A) - Lampatronics
		Adjustable DC Regulated Power Supply	1	DIY Kit Adjustable DC Regulated Power Supply (0~30V & 0~3A) | RAM Electronics website
	DC Plug Female		1	DC Plug FeMale with Cable 5.5×2.1mm - Lampatronics

Project 2: Multi-output power supply

2.1) Suggested Circuit Diagram:

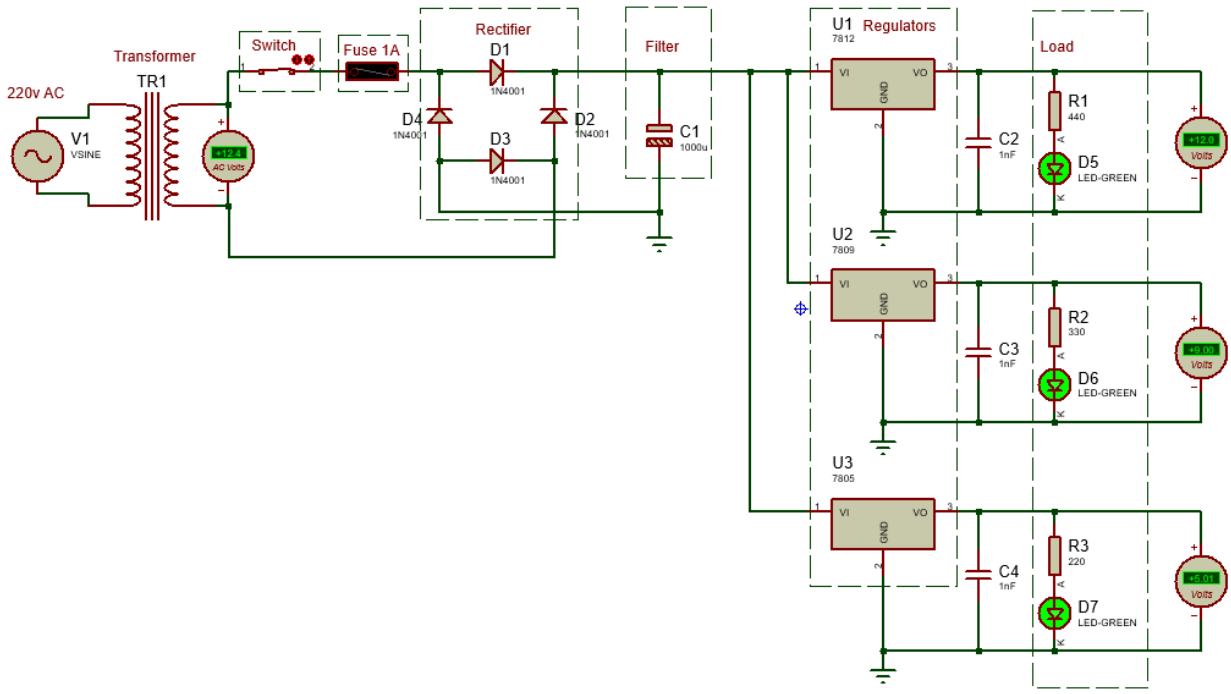

2.2) Description:

- Multi-Output Regulated Power Supply (220V AC to 12V, 9V, and 5V DC):
  - Transformer (TR1): Steps down the 220V AC mains to a lower AC voltage suitable for rectification.
  - Switch & Fuse (Optional): A power switch and 1A fuse can be added for safety and overcurrent protection, but they are not mandatory.
  - Rectification: A bridge rectifier (D1–D4, 1N4001 diodes) converts the AC voltage to pulsating DC.
  - Smoothing: A large electrolytic capacitor (C1, 1000µF) smooths the rectified DC to reduce ripples.
  - Voltage Regulation:
    - U1 (7812) → provides a regulated +12V DC output.
    - U2 (7809) → provides a regulated +9V DC output.
    - U3 (7805) → provides a regulated +5V DC output.
  - Decoupling Capacitors (C2–C4): Small capacitors (typically 1nF–100nF) placed near regulators to stabilize and filter high-frequency noise.
  - Load Indicators: Each output has a resistor–LED pair (R1–R3 with D5–D7) to indicate regulator operation.
  - Outputs: Delivers multiple regulated DC voltages (+12V, +9V, +5V), suitable for powering different electronic circuits simultaneously.

Note that:

- All ground terminals in the circuit are connected together to form a common ground reference.
- You can also search for similar circuit, ensuring it come from a reliable source.

2.3) Components:

	Component name		Quantity	Link
Multi-output power supply	Center Tapped Step Down Transformer 220V (6V-0-6V) 300 mA		1	Transformer 220Vac to 6-0-6Vac (1A) - Lampatronics 6/0/6 - 1A Transformer | RAM Electronics website
	AC Power Cord 220V AC		1	Ac Power Cord 220Vac | RAM Electronics website AC Power Cable Plug Lamp Cord With Switch (1meter) Ac Power Cord – Free Electronics
	Silicon Diodes (1N4001 or 1N4007)		4	Lampatronics: Diode 1N4007 (1A / 1000V) RAM Electronics: 1N4007 Silicon Diode 1A - 1000V
	Light Emitting Diodes (LED) 5 mm (Through Hole)		4	LED 5MM (Red) - Lampatronics LED 5mm Green Color | RAM Electronics website
	Resistors	Resistors (430 Ω)	2	Resistor 430 ohm - 1/4W (2pcs)
		Resistors (330 Ω)	2	Resistor 330 ohm - 1/2W (1pcs) - Lampatronics Resistor 330 ohm - 1/4W (2pcs) - Lampatronics
		Resistors (220 Ω)	2	Resistor 220 ohm - 1/4W (2pcs) Resistor 220 ohm - 1/2W (1pcs)
	Breadboard (Test Board) 830 Tie point		1	Breadboard Soldless 830 Tie-points BB-01 Breadboard 830 Tie Point | RAM Electronics website
	20 cm Male to Male Jumper Wires Set		10 or more	Jumper Wire 20cm Male to Male (1 wire) Jumper Wire 20cm Male to FeMale (1 wire) - Lampatronics PH61 - 20cm Male to Male 40 Jumper Wires Set | RAM Electronics website
	Capacitors	Capacitor (1000 µF) – 50 V	2	Capacitor 1000UF/50V Ceramic Capacitors 1NF/50V (102) Ceramic Capacitor 10nf/50V (103)
		Capacitor (1 nF) – 50 V	4	
	Positive Voltage Regulator	7805	2 Pieces of each type	L7805CV (Positive Voltage Regulator 5V) - Lampatronics L7809CV (Positive Voltage Regulator 9V) L7812CV (Positive Voltage Regulator 12V) - Lampatronics
		7809		
		7812		

Project 3: Voltage regulator with Zener

3.1) Suggested Circuit Diagram:

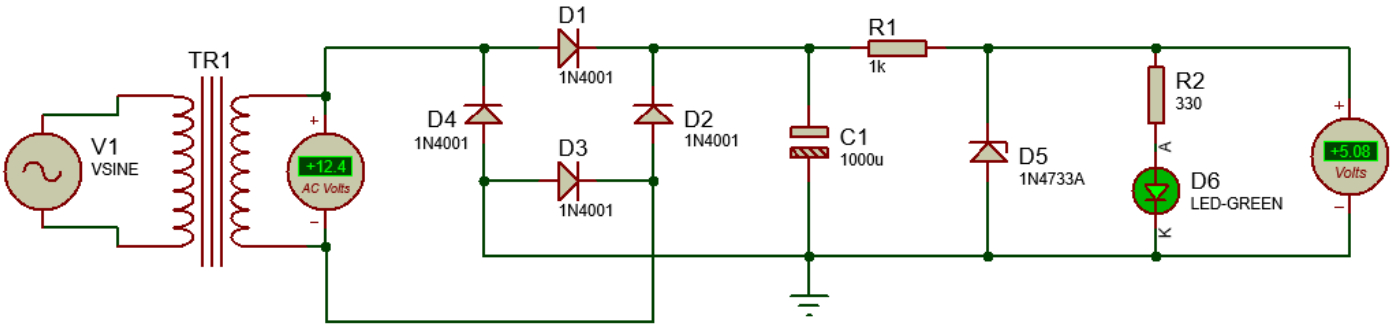

3.2) Description:

- Voltage Regulator with Zener Diode (220V AC to 5V DC):
  - Transformer (TR1): Steps down the 220V AC mains to a lower AC voltage (around 12V AC).
  - Rectification (D1–D4, 1N4001): A bridge rectifier converts the AC voltage into pulsating DC.
  - Filtering (C1, 1000µF): The electrolytic capacitor smooths the rectified DC, reducing voltage ripples.
  - Current Limiting (R1, 1kΩ): Limits the current flowing through the Zener diode to protect it from excess current.
  - Voltage Regulation (D5, 1N4733A Zener Diode, 5.1V): Maintains a constant regulated voltage (≈5V DC) across the load by clamping the voltage.
  - Load Indicators: Each output has a resistor–LED pair (R1–R3 with D5–D7) to indicate regulator operation.

Note that:

- You can also search for similar circuit, ensuring it come from a reliable source.

3.3) Components:

		Component name		Quantity	Link
Voltage regulator with Zener	Reused Components [Project 2 components]	Center Tapped Step Down Transformer 220V (6V-0-6V) 300 mA		1	Transformer 220Vac to 6-0-6Vac (1A) - Lampatronics 6/0/6 - 1A Transformer | RAM Electronics website
		AC Power Cord 220V AC		1	Ac Power Cord 220Vac | RAM Electronics website AC Power Cable Plug Lamp Cord With Switch (1meter) Ac Power Cord – Free Electronics
		Silicon Diodes (1N4001 or 1N4007)		4	Lampatronics: Diode 1N4007 (1A / 1000V) RAM Electronics: 1N4007 Silicon Diode 1A - 1000V
		Light Emitting Diodes (LED) 5 mm (Through Hole)		2	LED 5MM (Red) - Lampatronics LED 5mm Green Color | RAM Electronics website
		Resistors (330 Ω)		2	Resistor 330 ohm - 1/2W (1pcs) - Lampatronics Resistor 330 ohm - 1/4W (2pcs) - Lampatronics
		Breadboard (Test Board) 830 Tie point		1	Breadboard Soldless 830 Tie-points BB-01 Breadboard 830 Tie Point | RAM Electronics website
		20 cm Male to Male Jumper Wires Set		10 or more	Jumper Wire 20cm Male to Male (1 wire) Jumper Wire 20cm Male to FeMale (1 wire) - Lampatronics PH61 - 20cm Male to Male 40 Jumper Wires Set | RAM Electronics website
		Capacitors	Capacitor (1000 µF) – 50 V	2	Capacitor 1000UF/50V Ceramic Capacitors 1NF/50V (102) Ceramic Capacitor 10nf/50V (103)
			Capacitor (1 nF) – 50 V	4	
	Additional components	Resistors (1 KΩ)		2	Resistor 1K ohm - 1/4W (2pcs) Resistor 1K ohm - 1/2W (1pcs)
		5.1V Zener diode		2	Zener 5.1V 5V1 (1/2W)

Project 4: Traffic light system with seven segments

4.1) Suggested Circuit Diagram:

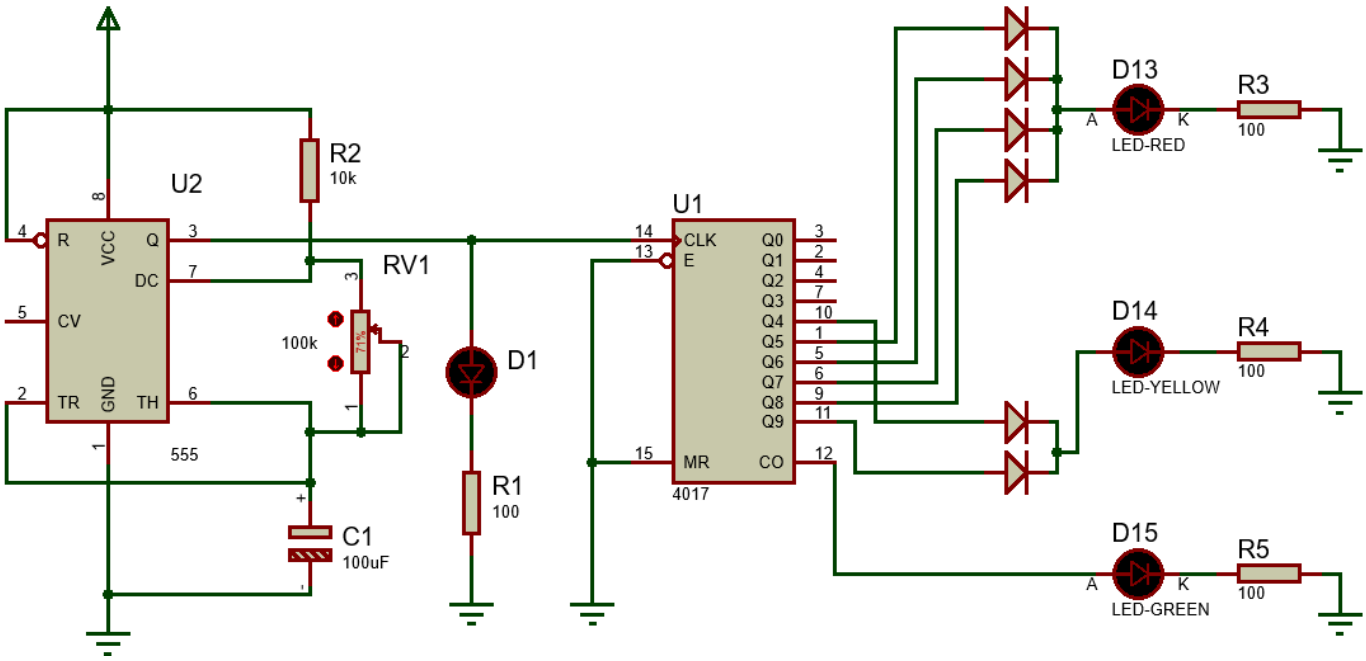

4.2) Working Principle:

- The 555 Timer IC operates as an astable multivibrator, generating continuous clock pulses.
- These pulses are fed to the CD4017 Decade Counter at its clock input.
- The CD4017 activates its outputs sequentially, causing the Red, Yellow, and Green LEDs to turn ON in order.
- The variable resistor (RV1) adjusts the speed at which the LEDs change.
- The cycle repeats continuously, mimicking a traffic light sequence.

Notes:

- In the ICs (555 Timer and CD4017), the pin names (like CLOCK, RESET) are different from the pin numbers. Always connect according to the pin numbers shown in the datasheet.
- Some pins, like VCC (power) and GND (ground), may be hidden in the Proteus schematic view. Make sure to manually connect them even if they are not visibly shown in the schematic.
- The VCC voltage should be 5V or 9V, but 9V is preferred for better performance.

4.3) Bonus Challenge:

Additional marks will be awarded for implementing the traffic light system with a countdown display using a seven-segment driver (IC 4026).

- The 4026 IC must be used to interface the counter with the seven-segment display.
- The countdown should be accurately synchronized with the traffic light sequence.

4.4) Components:

		Component name	Quantity	Link
Traffic Light	Supplying (only one)	DC Power Adapter 9VDC + DC Plug Female	1 of each	DC Power Adapter (9VDC - 1A) DC Plug FeMale with Cable 5.5×2.1mm
		Battery 9V + Battery Clip	1 of each	Battery 9V Westinghouse Battery 9V Clip
		The power supply designed in Project 1 can be used to provide power to the Traffic Light circuit		
	ICs (All needed)	Timer 555 IC	1	Timer NE555 IC
		Decade counter 4017	1	CD4017 (Decade counter 5-stage Johnson counter)
	Diodes (All needed)	Silicon Diodes (1N4001 or 1N4007)	6	Diode 1N4007 (1A / 1000V)
		Light Emitting Diodes (LED) 5 mm (Through Hole)	4	LED 5MM (Red) LED 5MM (Green) LED 5MM (Yellow) LED 5MM Clear (White)
	Resistors (All needed)	Resistors (100 Ω)	4	Resistor 100 ohm - 1/4W (2pcs)
		Resistors (10 KΩ)	1	Resistor 10K ohm - 1/4W (2pcs)
		Potentiometer (100 KΩ)	1	Rotary Potentiometer 100Kohm
	Capacitor (100 µF)		1	Capacitor 100UF/25V
	Breadboard (Test Board) 830 Tie point		1	Breadboard Soldless 830 Tie-points
	10 cm or 20 cm Male to Male Jumper Wires Set		20	Jumper Wire 10cm Male to Male (1 wire) Jumper Wire 20cm Male to Male (1 wire)

Project 5: Common Emitter Audio Amplifier

5.1) Suggested Circuit Diagram:

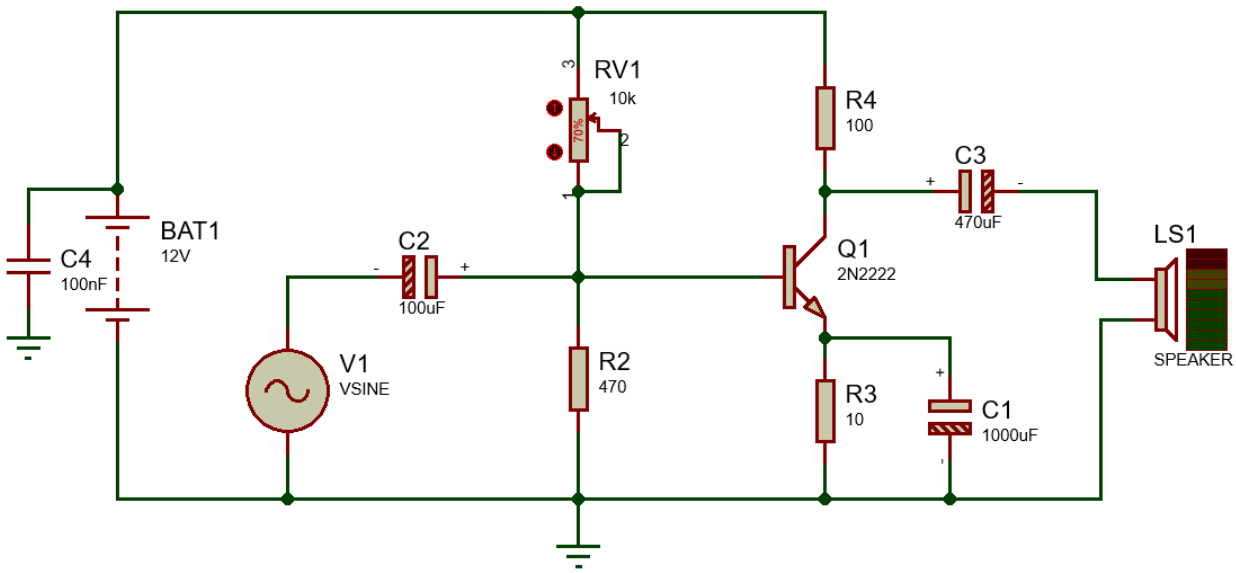

5.2) Description:

- Common Emitter Audio Amplifier with 2N2222 Transistor:
  - Power Supply (BAT1, 12V): Provides the DC operating voltage for the amplifier.
  - Input Signal (V1, VSINE): The audio input is taken from a mobile phone headphone jack, typically in the range of 50–100 mV AC (at 1 kHz for testing), representing the audio signal.
  - Input Coupling Capacitor (C2, 100 µF): Blocks DC and couples only the AC input signal to the transistor's base.
  - Biasing Network (RV1 – 10kΩ Potentiometer, R2 – 470Ω): Sets the base bias point of the transistor for proper operation in the active region; RV1 allows fine-tuning.
  - Amplifying Device (Q1, 2N2222 NPN Transistor): Operates in common-emitter configuration to amplify the weak input signal.
  - Collector Resistor (R4, 100Ω): Controls collector current and develops the amplified AC voltage.
  - Emitter Resistor (R3, 100Ω): Provides thermal stability through negative feedback.
  - Emitter Bypass Capacitor (C1, 1000 µF): Bypasses AC around R3 to maximize AC gain while maintaining DC bias stability.
  - Output Coupling Capacitor (C3, 470 µF): Blocks DC and passes the amplified AC signal to the load (speaker).
  - Speaker (LS1, 8Ω typical): Converts the amplified AC signal into audible sound.
  - Supply Decoupling Capacitor (C4, 100 nF): Filters high-frequency noise and stabilizes the DC supply.

Note that:

- You can also search for similar circuit, ensuring it come from a reliable source.
- The input source (mobile phone audio jack) delivers low-level AC signals (tens of millivolts), which require amplification to drive a speaker.

5.3) Components:

	Component name		Quantity	Link
Common Emitter Audio Amplifier	2N2222 NPN Transistor		2	2N2222 Transistor(40V , 600mA) NPN
	Speaker (8 Ω)		1	Speaker – 3W (8 Ohm) 1Pcs
	DC Power Adapter (12VDC – 1A)		1	Wall Adapter Variable from 1.5Vdc to 12Vdc (1A) - Lampatronics [Recommended] Or DC Power Adapter (12VDC - 1A)
	DC Plug Female with Cable		1	DC Plug FeMale with Cable 5.5×2.1mm
	Audio Plug 3.5mm		1	Audio Plug 3.5mm Stereo - Metal
	Breadboard (Test Board) 830 Tie point		1	Lampatronics: Breadboard Soldless 830 Tie-points
	20 cm Male to Male Jumper Wires Set		10 or more	Jumper Wire 20cm Male to FeMale (1 wire) - Lampatronics PH61 - 20cm Male to Male 40 Jumper Wires Set | RAM Electronics website
	Capacitors	Capacitor (1000 µF) – 50 V	2 Pieces of each	Capacitor 1000UF/50V Capacitor 470UF/50V Capacitor 100UF/50V Ceramic Capacitors 100NF/50V (104)
		Capacitor (470 µF) – 50 V		
		Capacitor (100 µF) – 50 V		
		Capacitor (100 nF) – 50 V		
	Resistors	Resistors (10 Ω)	2 Pieces of each	Resistor 10 ohm - 1/4W (2pcs) Resistor 100 ohm - 1W (1pcs) Resistor 470 ohm - 1/4W (2pcs) Rotary Potentiometer 10Kohm
		Resistors (100 Ω-1 W)		
		Resistors (470 Ω)		
		Potentiometer (10 KΩ)		